ASVAB-SECTION-3 Q&As

ASVAB Section Three : Mechanical Comprehension

Pass ASVAB ASVAB-SECTION-3 Exam with 100% Guarantee

Free Download Real Questions & Answers **PDF** and **VCE** file from:

https://www.geekcert.com/asvab-section-3.html

100% Passing Guarantee
100% Money Back Assurance

Following Questions and Answers are all new published by ASVAB Official Exam Center

- **Instant Download** After Purchase
- **100% Money Back** Guarantee
- **365 Days** Free Update
- **800,000+** Satisfied Customers

QUESTION 1

Water flows into a container at a rate of 140 gallons per minute. The container has a small opening at the bottom that drains water at a rate of 1 gallon per second.

How long will it take to fill the container to 240 gallons?

A. 2 min

B. 3 min

C. 4 min D. Not enough information

Correct Answer: B

The opening drains water at 1 gallon/second which is equivalent to 60 gallons/min. Therefore, the net gain

of water is 140 gallons/min - 60/gallons/min = 80 gallons/min.

To fill 240 gallons at a rate of 80 gallons/min will take 3 minutes.

QUESTION 2

The wheels below are connected by a belt as shown.

If the larger wheel makes two revolutions, how many revolutions will the smaller wheel make?

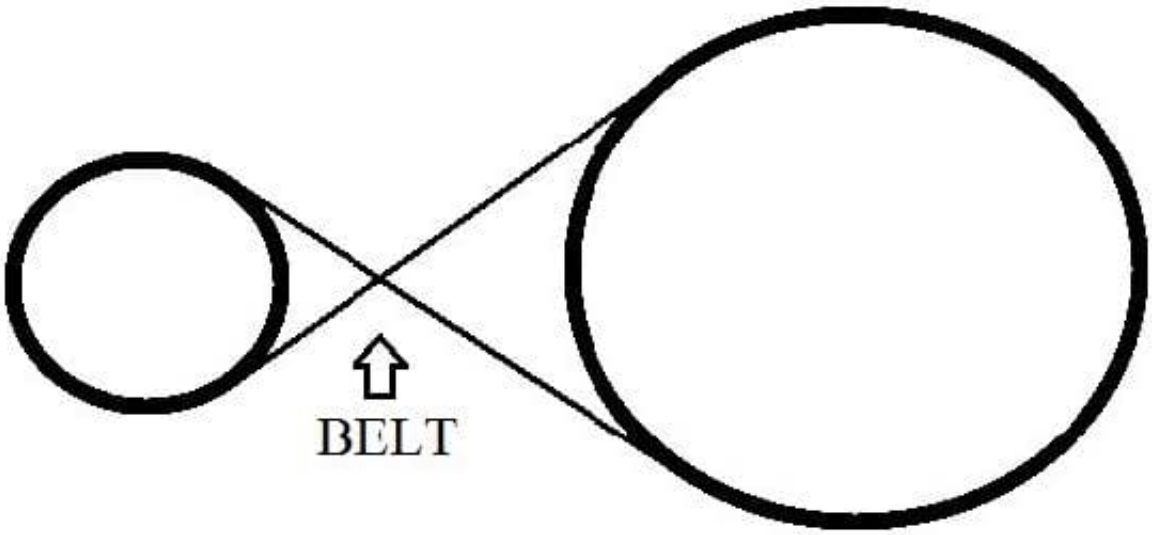

A. Less than one

B. One

C. Two

D. More than two

Correct Answer: D

We are not told the sizes of the two wheels, but we can see that one is larger than the other.

If the two wheels are connected by a belt, the small wheel will be forced to turn fester and complete more

turns than the larger wheel.

QUESTION 3

Torsion springs _____.

A. produce a direct pull

B. exert no pull

C. produce a twisting action

D. coil but do not uncoil

Correct Answer: C

Torsion springs coil or uncoil and produce a twisting action, not a direct pull.

QUESTION 4

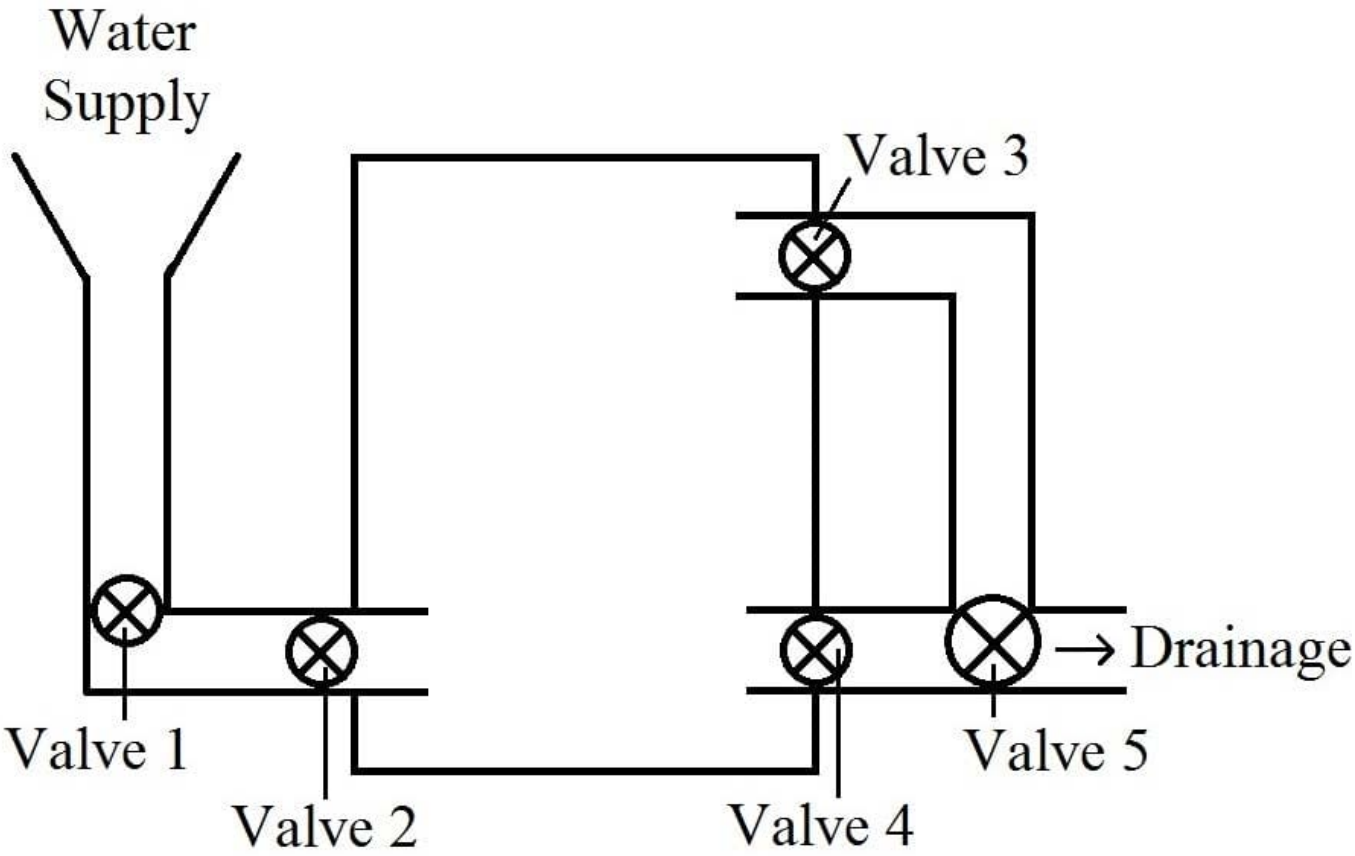

In the figure above, assume the valves are all open.

Which valves need to be closed for the tank to fill up completely?

A. 3 and 4 only

B. 3, 4, and 5

C. 2, 3, and 4

D. 4 only

Correct Answer: A

Closing only Valves 3 and 4 keeps the water from leaving the tank.

QUESTION 5

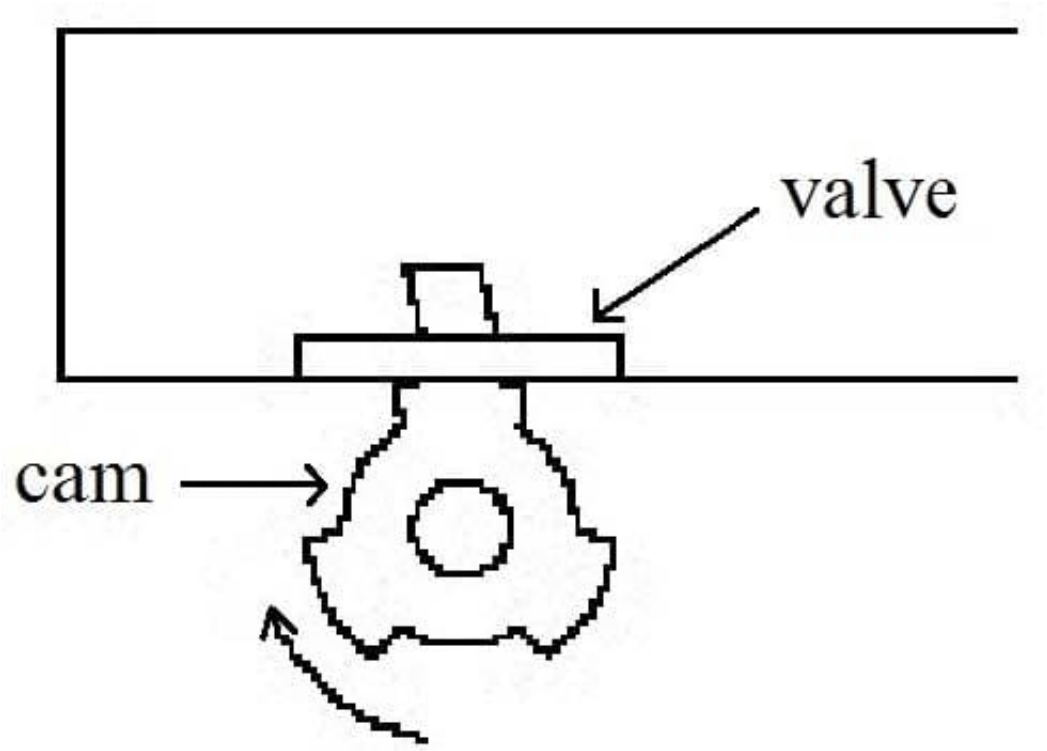

For the valve shown in the figure above to open once each second, the cam must revolve at a rate of _____.

A. 6 rpm

B. 10 rpm

C. 15 rpm

D. 3 rpm

Correct Answer: A

Because 60 seconds comprise a minute, the valve must open 60 times per minute. The cam will open the

valve 10 times per revolution, so 60 ÷ 10 = 6.

The cam must make 6 revolutions per minute to raise the valve 60 times per minute.

Latest ASVAB-SECTION-3 Dumps | ASVAB-SECTION-3 Study Guide | ASVAB-SECTION-3 Braindumps